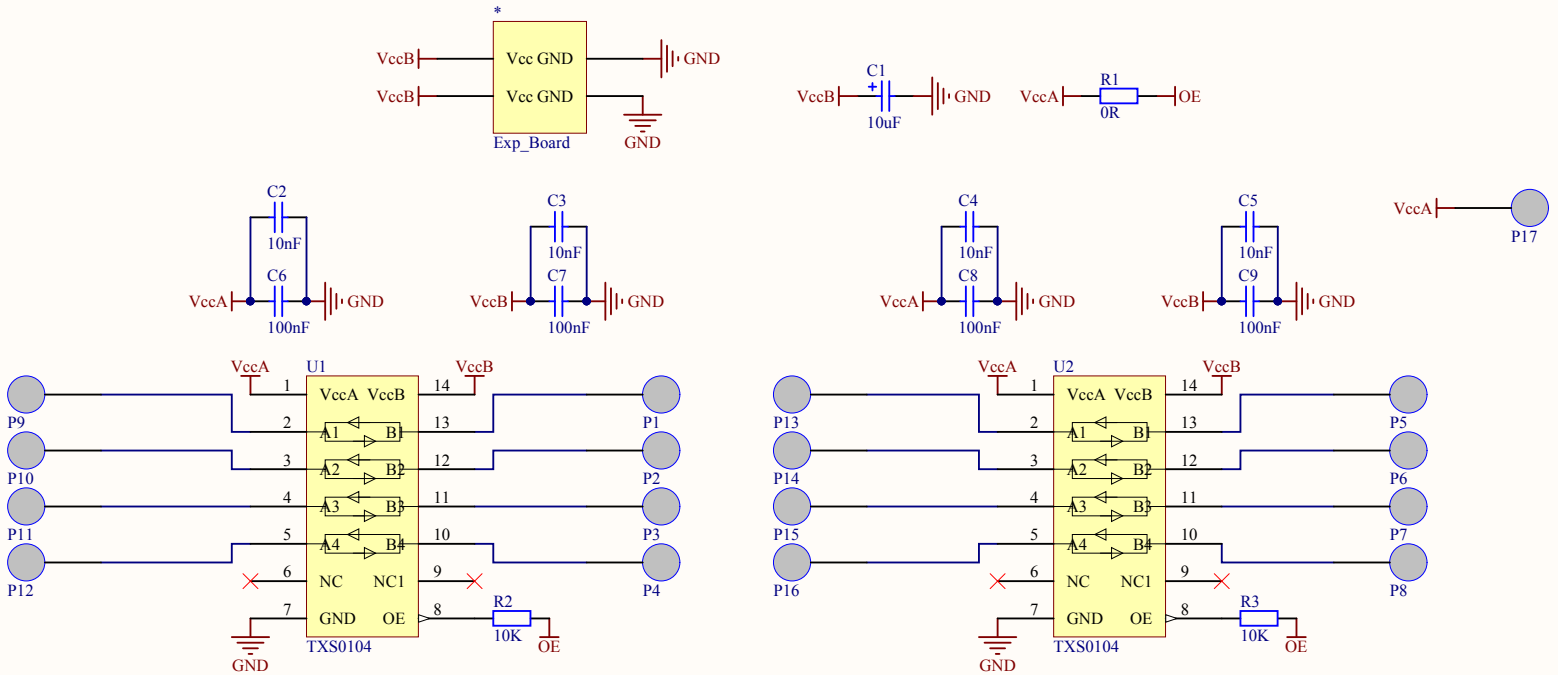

Title:	*Pegelwandler 2014*		
Description:	*Description*		
Name:	*Alison Jäggi*	Checked:	*Aaron Leander*
Size: *A4*	Number: *	Revision:	*1.3*
Date: *21.07.2014*	Time: *17:10:02*	Sheet *1* of *1*	
File:	*D:\SVN\ExpSystem\Schnittstellen\Pegelwandler_2014\Hardware\Pegelwandler_2014.SchDoc*		

NTB
INTERSTAATLICHE HOCHSCHULE
FÜR TECHNIK BUCHS

NTB Interstate University of Applied Sciences of Technology Buchs
Werdenbergstrasse 4
9471 Buchs Switzerland

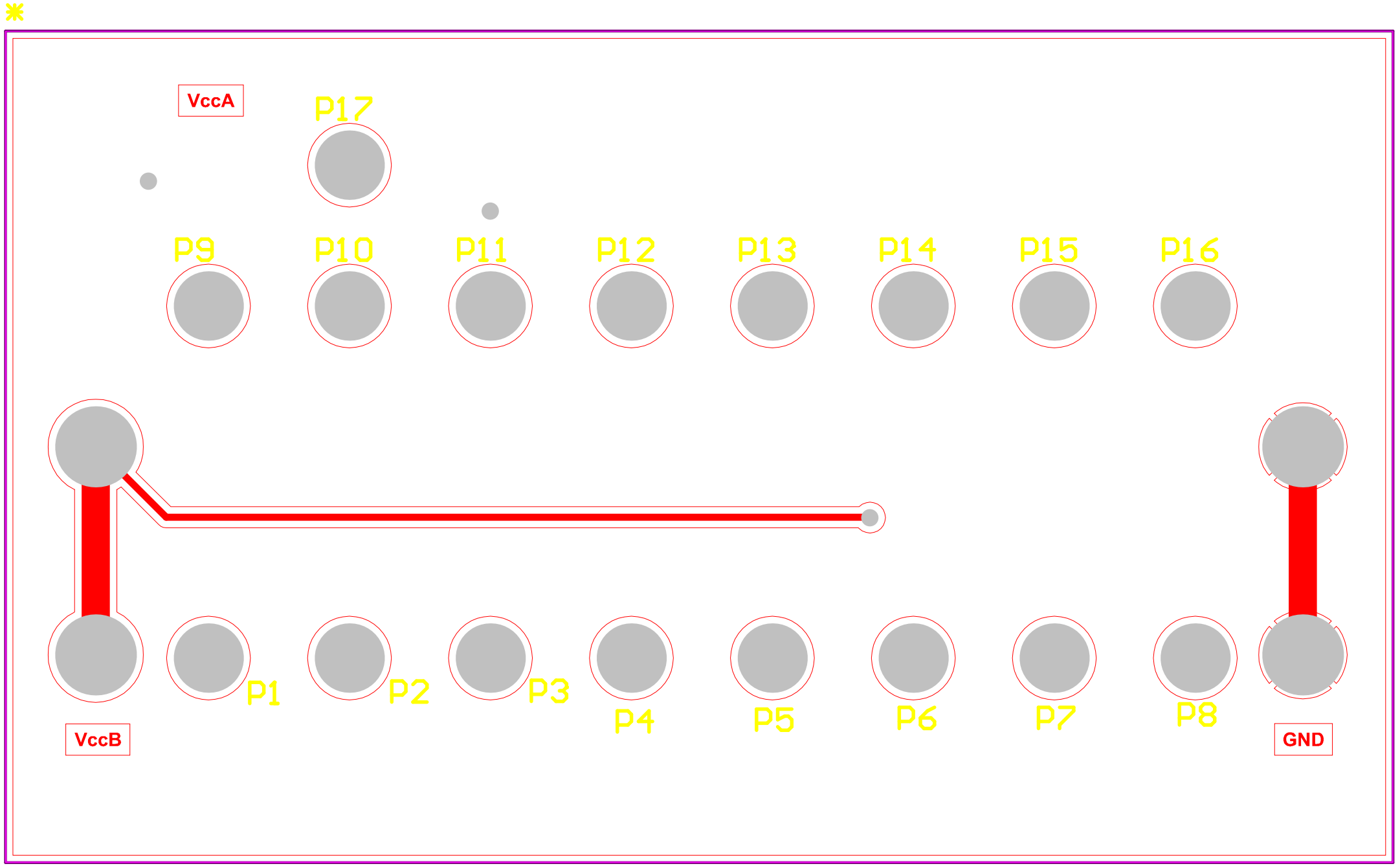
VccA
P17
P9
P10
P11
P12
P13
P14
P15
P16
P1
P2
P3
P4
P5
P6
P7
P8
VccB
GND

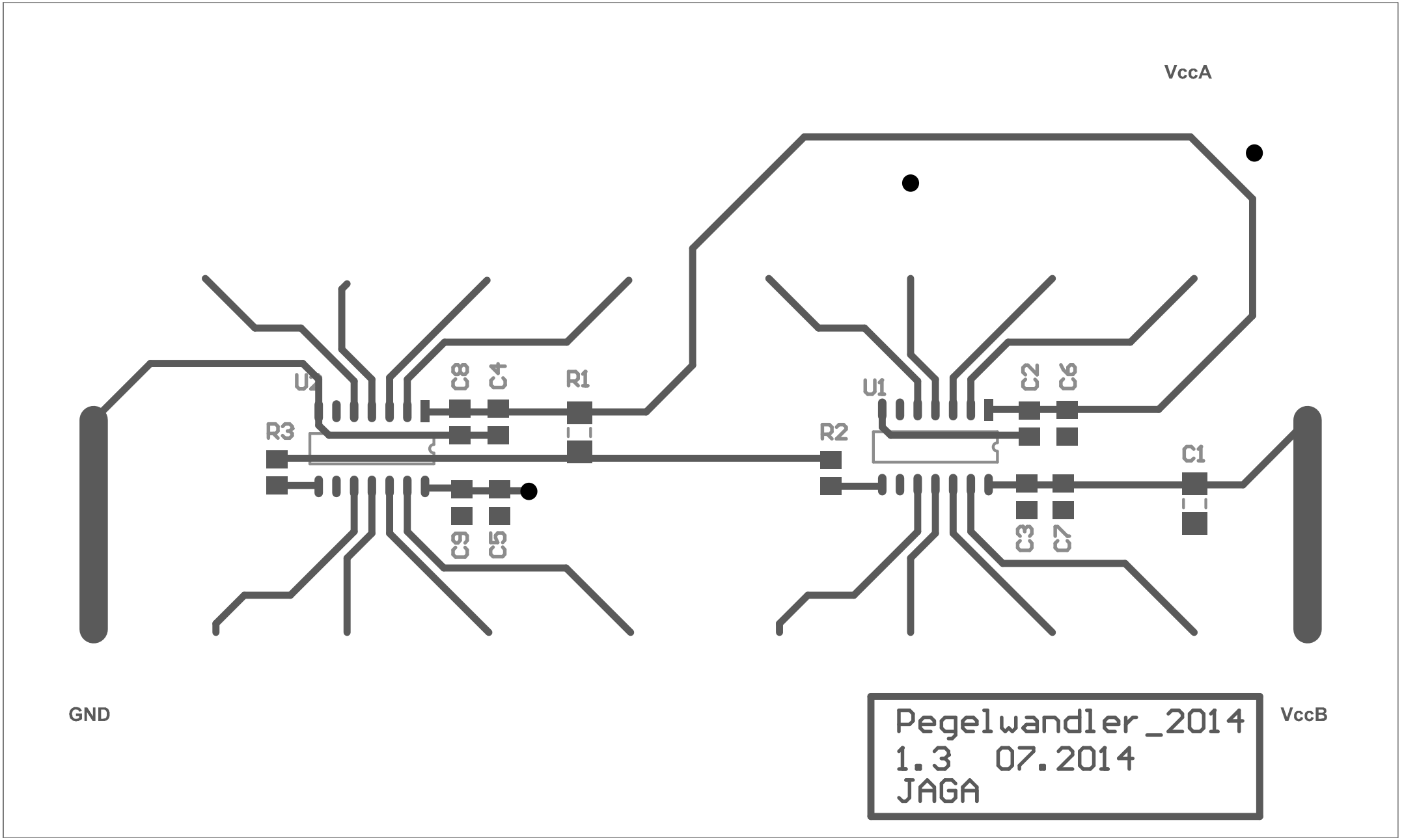
VccA
U2
C8
C4
R1
R3
C9
C5
U1
C2
C6
R2
C1
C3
C7
GND
VccB
Pegelwandler_2014
1.3 07.2014
JAGA

Comment	Description	Designator	Footprint	LibRef	Quantity
Exp_Board			Exp_Board	Exp_Board	1
10uF	10uf/10V/Bauform A/Farnell: 1364882	C1	1206	Cpol	1
10nF	Capasistor	C2, C3, C4, C5	0805	C	4
100nF	Capasistor	C6, C7, C8, C9	0805	C	4
Hole_2mm	Hülse_2mm	P1, P2, P3, P4, P5, P6, P7, P8, P9, P10, P11, P12, P13, P14, P15, P16, P17	Hole_2mm	Hole_2mm	17
0R	Resistor	R1	1206	R	1
10K	Resistor	R2, R3	0805	R	2
TXS0104	TXS0104	U1, U2	SOP14	TXS0104	2